3.13. NATIONAL RESEARCH NUCLEAR UNIVERSITY "MOSCOW ENGINEERING PHYSICS INSTITUTE"

115409, Moscow, Kashirskoye sh., 31.
Tel: (495) 324-8766 Fax: (495) 324-8356
http://www.mephi.ru
E-mail: mephi@mephi.ru

In 1946 a department of engineering physics was formed as part of the Moscow Mechanical Institute of Munitions to train skilled personnel for the country's nuclear power industry and science. The institute and the department were both founded on the initiative of B.L. Vannikov, the People's Commissar for Munitions. The establishment of the new department was greatly contributed to by I.V. Kurchatov, Ya.B. Zeldovich and A.I. Leypunskiy. In 1953 the department gave its name to the institute as such, which came to be known since as Moscow Engineering Physics Institute (MEPhI). More than 90 members and corresponding members of the USSR and Russian Academies of Sciences were heavily involved in the formation and evolution of MEPhI. In different years MEPhI employed such Noble Prize winners as Academicians N.N. Semenov, I.Ye. Tamm, I.M. Frank, P.A. Cherenkov, A.N. Sakharov and N.G. Basov.


L.D. Ryabev


V.N. Mikhaylov


A.Yu. Rumyantsev

A number of MEPhI graduates (L.D. Ryabev, V.N. Mikhaylov, A.Yu. Rumyantsev) headed the Russian Ministry for Atomic Energy in different periods. At present time, there are MEPhI graduates holding senior positions in many of the country's regions.

In 2009, by a Russian government order, MEPhI was reorganized into the National Research Nuclear University "MEPhI" (MEPhI NRNU). The purpose of the NRNU formation was to give manning and innovative scientific support to nuclear power and other high-tech industries in Russia's economic and social sectors through training specialist staff in the University's major disciplines based on consistent modernization of the multilevel vocational training system in a single educational environment, and through integration of scientific, educational and industrial domains.

MEPhI graduates research engineers, engineers, bachelors and masters in top-priority fields of science and technology for high-tech and knowledge-intensive industries, as well as for such fields of innovations as radiation and nuclear technologies, nanotechnologies and nanomaterials, medical physics and technology, ecology and biophysics, information science and information security. Apart from this, MEPhI trains experts in international scientific and technological cooperation, economy, management, technological and financial monitoring and auditing of high-technology sectors of Russian and international economy.


M.N. STRIKHANOV,
Rector of MEPhI NRNU


MEPhI headquarters

MEPhI offers post-graduate programs of training and carries out fundamental and applied research in top-priority fields of activities.

MEPhI NRNI has specialization in the following fields of educational, research and innovative activities:

- nuclear technologies and nuclear medicine;
- fundamental properties of matter;
- modern high technologies;
- modern information technologies and supercomputers;
- management and economy in the field of high, primarily nuclear, technologies.

MEPhI NRNU possesses unique facilities, including the IRT MIFI nuclear research reactor, subcritical assemblies, a neutron generator, the NEVOD neutrino water detector with a Cherenkov detector and a position detector of a high spatial and angular resolution, and electron and ion accelerators.

One of the scientific divisions of MEPhI is the Nuclear Center (NC) formed based on the research reactor as a shared training, scientific and teaching facility that offers highly extended research capabilities to the university staff.

The Scientific and Technical Council is responsible for coordinating the NC's research, training and scientific programs. The Council comprises representatives of MEPhI's departments carrying out research at the NC and members of outside scientific teams.

MEPhI cooperates broadly in education and science with many foreign universities and research centers. The recent years have seen the scope of collaborative research with the US, German, French and Japanese scientific communities increased manyfold.

Nuclear research facilities at MEPhI NRNU

Type	Name	Thermal power, kW	Criticality achieved in	Status
RR	IRT MIFI	2 500.00	1967	Operating
SCF	VVER	–	1974	Operating
SCF	UV1	–	1983	Operating
SCF	UV2	–	1972	Operating
SCF	UVPSh	–	1964	Operating
SCF	UG	–	1955	Operating

IRT MIFI RESEARCH REACTOR

The IRT MIFI research reactor is a heterogeneous pool-type water-cooled water-moderated thermal-neutron reactor with a steady neutron flux. The reactor achieved first criticality on 26.05.1967 and saw its energy startup on 03.11.1967.

The IRT MIFI is the Nuclear Center's base facility used to train highly skilled personnel and carry out research in advanced fields of nuclear science.

The IRT MIFI is a research reactor designed by NIKIET based on the model IRT-1000 reactor back in the late 1950s. Thanks to the efforts of primarily operating personnel, the reactor has had most of its systems and components retrofitted, rendering it as meeting up-to-date safety requirements.

The phased strategy adopted for the reactor retrofit made it possible to upgrade the reactor's control and protection system (CPS), radiation monitoring system (RMS), power supply system and many other systems without long-term shutdowns of the reactor.

The reactor is under control of Russian supervisory authorities and the IAEA.

The core vessel of the inner dimensions 429×572×880 mm is accommodated within a 7.8 m deep pool filled with chemically purified water. All reactor vessel parts, including the pool shell, are made of aluminum alloys.

IRT-2M and IRT-3M fuel assemblies with square-tube coaxial fuel elements are used in the IRT MIFI reactor.

A plaque commemorating the IRT MIFI reactor first criticality at the reactor building

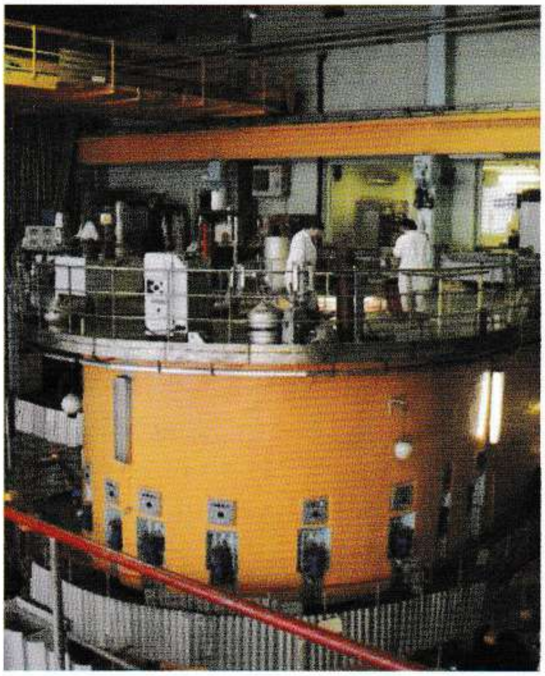

IRT MIFI central room

The reactor has a three-circuit coolant system. The zero cooling circuit is closed within the reactor pool as such (core – pool) thanks to the use of an injector. The injector creates the coolant flow through the core that is three times as great as the coolant flow produced by the primary coolant pumps, thanks to sucking in water directly from the reactor pool. This makes it possible to reduce the pump number, the piping diameters and the dimensions of the valves in the primary circuit, which comprises four circulation pumps, a primary circuit pipeline, two heat exchangers and shutoff valves. There are two pumps for the forced circulation of the secondary circuit water between the heat exchangers and the cooling towers (one pump is working and the other one is standby).

Main performance of the IRT MIFI reactor

Thermal power	2.5 MW
Thermal neutron flux in the core, max	$4.8 \cdot 10^{13}$ cm$^{-2} \cdot$s^{-1}
Thermal neutron flux in the reflector, max	$4.7 \cdot 10^{13}$ cm$^{-2} \cdot$s^{-1}
Fast neutron flux (E>0,8 MeV) in the core, max	$4.3 \cdot 10^{13}$ cm$^{-2} \cdot$s^{-1}
Core volume	59.3 l
Beginning-of-cycle reactivity margin	4…9 %
Lifetime reactivity variation	Up to 5 %
Mass of ^{235}U in fuel	3.5 kg
Burnup:	
core average	30 %
FA average	50 %
FA greatest	70 %
Operating cycle power generation, cumulative	Up to 6 000 MWh
Heat flux, max	0.19 MW/m^2
Fuel element wall temperature	72 °C
Surface boiling onset temperature	123 °C
Surface boiling temperature margin ($\Delta T_{boil}=T_b-T_w$)	51 °C
Surface boiling margin	3.9
Moderator	Water
Coolant	Water
Core inlet water temperature	45 °C
Core pressure difference	0.09 MPa
Number of CPS control members:	
scram	3
shim	6
automatic regulation	1

Experimental capabilities of the IRT MIFI reactor

The IRT MIFI reactor offers broad experimental capabilities, including:

- up to 20 positions for vertical experimental channels (VEC);
- eight horizontal experimental channels (HEC) of the diameter 110 mm (4 channels) and 160 mm (4 channels).

Main areas of studies

The IRT MIFI reactor is intended for use in research and training programs on:

- reactor physics and engineering;
- nuclear physics;
- solid-state physics;
- radiation physics;
- radiation material science;
- neutron activation analysis;
- radiobiology.

The accomplishments achieved at MEPhI's unique experimental facilities have made a major contribution to the modern state of worldwide science:

- creation of a nuclear-pumped laser with a low neutron flux level for steady-state generation;
- creation of a neutron microscope;
- studies into rare nucleus fission processes, in which no long-lived fission products are present;
- development of reliable nuclear reactor control and protection systems;
- testing of neutron flux detectors and instrumentation for Rosatom and the submarine fleet;
- research on neutron-capture therapy for malignant tumors, and other activities.

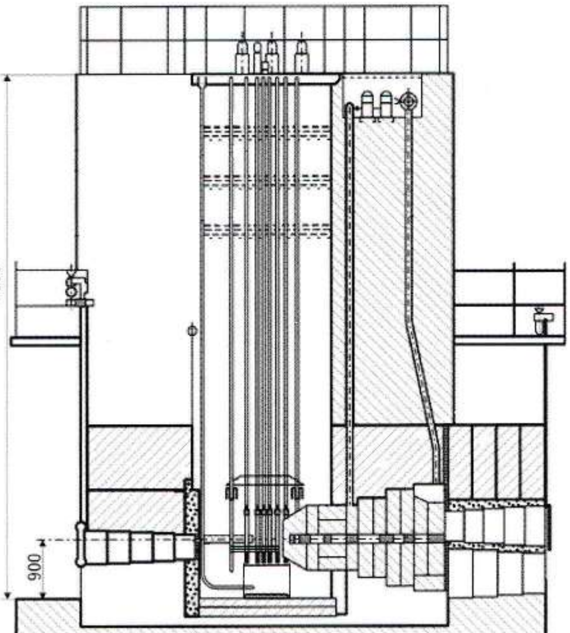

A cut view of the IRT MIFI reactor

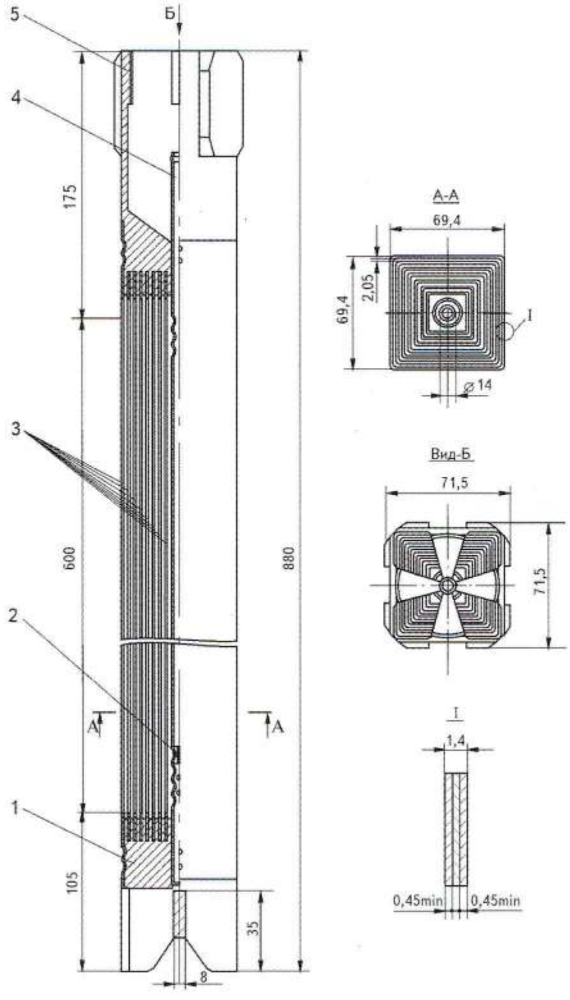

IRT MIFI fuel assembly:
1 – tail, 2 – washer, 3 – fuel elements, 4 – displacer, 5 – head

International cooperation

The NC of MEPhI cooperates with the following research organizations: the Institut Laue-Langevin (France), the National Research Center for Natural Sciences (Greece), the Los-Alamos National Laboratory, the Oak-Ridge National Laboratory, the Sandia National Laboratories, the Brookhaven National Laboratory, the Pacific Northwest National Laboratory and the Massachusets Institute of Technology (the USA).

Main activities

Draft radioactive emission standards and a design of MEPhI's NRF controlled area have been prepared and approved.

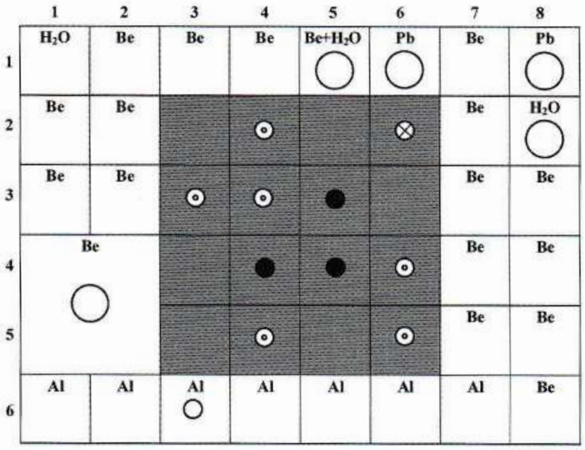

	1	2	3	4	5	6	7	8
1	H_2O	Be	Be	Be	$Be+H_2O$ ○	Pb ○	Be	Pb ○
2	Be	Be	▨	▨ ⊙	▨	▨ ⊗	Be	H_2O ○
3	Be	Be	▨ ⊙	▨ ⊙	▨ ●	▨	Be	Be
4	Be ○		▨	▨ ●	▨ ●	▨ ⊙	Be	Be
5			▨	▨ ⊙	▨	▨ ⊙	Be	Be
6	Al	Al	Al ○	Al	Al	Al	Al	Be

IRT MIFI core map:

▨ *working FA;*

Be *beryllium block;*

H_2O *water block;*

$Be+H_2O$ *beryllium-water block;*

Pb *lead block;*

Al *aluminum block;*

○ *vertical experimental channels;*

⊙ *shim rod;*

⊗ *automatic regulation rod;*

● *scram rod*

To have neutron-capture therapy of malignant tumors introduced into clinical practice, plans exist to use the nuclear reactor as the platform for establishing a specialized medical irradiation framework. This is expected to be formed through upgrading the thermal column of the IRT MIFI's horizontal channel, the beam of thermal and epithermal neutrons to be extracted into the irradiation box, which will be reequipped as a patient reception room.

Further evolution of the IRT MIFI reactor is defined by the major objectives faced both by the university staff and the reactor personnel:

- building the environment for preserving the existing research capabilities;
- securing the coming of young professionals into the nuclear science and technology community and cultivating safety culture in students and professional staff;
- reviving the public confidence in nuclear power.

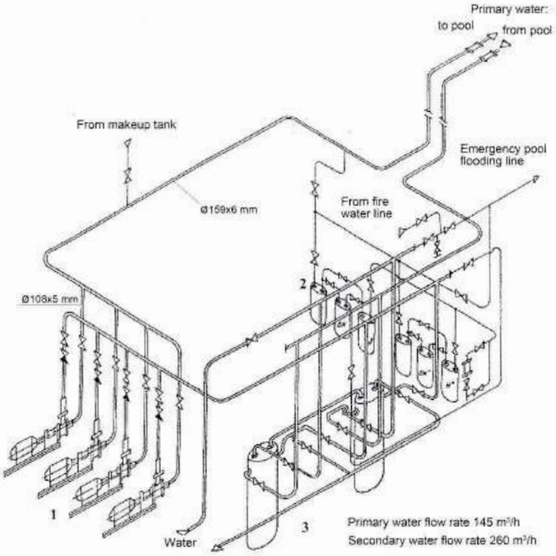

Simplified diagram of the cooling system:
1 – pumps; 2 – ion-exchanger filters; 3 – heat exchangers

To achieve these goals, an integrated retrofit and upgrading effort is required to give the IRT MIFI reactor extra safety and efficiency. This is the key to preserving the reactor, which is the only one operated within a multi-discipline educational establishment in the European part of Russia.

Contact person

ALEKSANDR PORTNOV
IRT MIFI Reactor Chief Engineer
Tel/fax: (495) 324-70-25
AAPortnov@mephi.ru

VVER URANIUM-WATER SUBCRITICAL FACILITY

The VVER uranium-water subcritical facility is based in the physical hall of the IRT MIFI research reactor. The VVER subritical facility (SCF) saw it first criticality achieved on 06.04.1974.

The VVER SCF comprises a subcritical assembly, a neutron beam converter, a biological shielding and neutron beam instrumentation. The neutron source for the assembly is the neutron beam from the reactor's horizontal experimental hole.

The subcritical assembly contains experimental fuel elements having the active part length of 125 cm. The fuel element material is baked uranium dioxide with a (Zr-Nb)-alloy cladding of the outer diameter 9.1 mm with the wall

Main performance of the VVER SCF

Fuel	UO_2
Enrichment	6.5 %
Number of fuel elements	Up to 400
Moderator	Water
Maximum achievable breeding factor	0.88
Design and extended life	Not limited

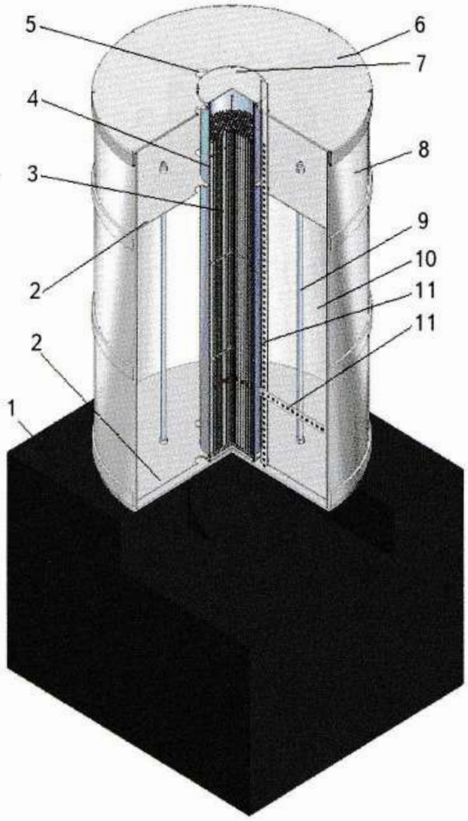

VVER SCF model:
1 – converter of neutron beam from the reactor HEC; 2 – spacer disks (2); 3 – reactor core; 4 – inner tank; 5 – reflector flux process monitoring channels (3); 6 – outer tank lid; 7 – inner tank lid; 8 – outer tank; 9 – threaded rods for the spacer disk attachment (4); 10 – neutron reflector (distilled water); 11 – tools to position activation detectors in the reflector

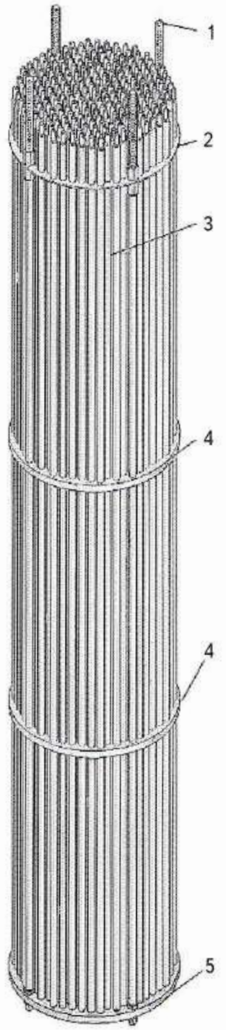

VVER SCF core model (lattice spacing 12.7 mm):
1 – threaded rods for the spacer grid attachment and core displacement (4); 2, 4, 5 – upper, intermediate (2) and lower (fuel element support plate) spacer grids; 3 – experimental fuel elements

thickness of 0.65 mm. The fuel slug diameter is 7.65 mm and the ^{235}U isotope enrichment is 6.5 %.

The maximum achievable breeding factor is 0.88. No critical state can be achieved at the VVER SCF because it does not have holes to insert fuel elements in excess of the number permitted. The thermal neutron flux in the assembly's working region is $\approx 10^8$ $cm^{-2} \cdot s^{-1}$.

The subcritical assembly simulates a VVER reactor fuel assembly. Experiments are conducted with fixed values of the fuel element spacing in the subcritical assembly: 10.2 mm; 10.5 mm; 11.0 mm; 11.5 mm; 12.7 mm; 13.6 mm; 15.0 mm; 16.0 mm; 19.0 mm.

Main areas of studies

The VVER SCF is designed for:

- studies in physics of operating and advanced light-water reactors;
- experiments to determine the benchmark parameters of lattices with UO_2, ThO_2, UO_2-ThO_2 and UO_2-Gd_2O_3 fuel at various water-to-fuel ratios. The experimental data obtained are used to support neutronic, nuclear constant and reactor nuclear safety analyses;
- training, research and graduation project programs, as part of which students carry out research experiments;
- laboratory training in physics of nuclear reactors, including study of homogeneous lattices and lattices that include heterogeneities (absorber rods, advanced nuclear fuel, air or water cavities). This involves determination of radial and axial distributions of neutron reaction rates and spectral functionals that represent the ratios of the rates of the most important neutron reactions in nuclear fuel.

UV-1 URANIUM-WATER SUBCRITICAL FACILITY

The UV-1 SCF is based in the training laboratory's physical hall at MEPhI's Department of Theoretical and Experimental Physics of Nuclear Reactors. The UV-1 facility saw its physical criticality achieved on 25.10.1983.

The UV-1 SCF comprises (see the figure):

- a uranium-water subcritical assembly (*1*) with the maximum effective breeding factor in the assembly of $K_{\text{eff.max}}$=0,80;
- a fabricated welded pedestal (*9*) made of standard rolled steel sections;
- a pulsed source of neutrons (*2*);
- 8 absorber rods (*6*). The absorber rods are inserted into the space between the process tubes of rows 2 and 3 (see the fueling map);
- SCF neutron field instrumentation.

The UV-1 SCF's subcritical assembly is a rectangular aluminum-alloy welded tank (*8*) of the depth 1250 mm and the cross section 550×550 mm. The tank's bottom and side faces have a coating of 0.4 mm thick cadmium sheets. The outside of the cadmium is covered with 1 mm thick aluminum sheets. There are 100 process channels (*7*) with fuel elements, retained with the aid of spacer grids (*3*). Each channel lattice is square-shaped and has a spacing of 55 mm. The volume between the channels is filled with water to the level, to which the process channels are filled with fuel elements. There is an SNM-14 neutron counter (*4*) placed in the water between the process channels along the assembly centerline to measure the interim distribution of the neutron flux in the assembly after the pulsed neutron source actuation.

The basis of each process channel is its body. This is an aluminum-alloy tube plugged at one end. Each tube has the outer diameter of 42 mm, the length of 1250 mm and the thickness of 1 mm.

There are grooves made along the tube for the slugs (fuel elements) of the outer diameter 37 mm to be placed coaxially therein such that there is an air gap of 1.5 mm. There are 10 fuel elements in each channel.

The fuel elements contain uranium-metal fuel with natural concentration of isotopes. Each fuel element has the outer diameter of 37 mm and the length of 102 mm. The existing aluminum casing is 1 mm thick.

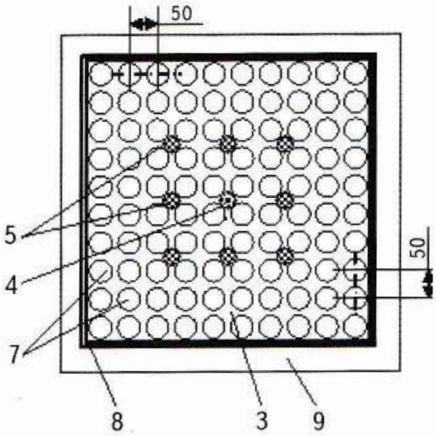

UV-1 SCF core map

The absorber rods (5) are aluminum-alloy tubes having the outer diameter of 24 mm and the wall thickness of 1 mm. There is a 0.4 mm thick cadmium tube inserted into each absorber rod to a height of 1270 mm, bearing against the inner walls of the aluminum tube. All vacant space inside the tube is filled with boron carbide.

Main areas of studies

The UV-1 SCF is designed for:

– simulation and experimental study of non-steady neutronic processes in uranium-water lattices;

– laboratory training research (as part of practical courses in physics of reactors) to experimentally determine reactivity variations due to the absorber rod insertion into the subcritical assembly by non-steady diffusion method.

Main performance of the UV-1 facility

Fuel	Uranium-metal*
Number of fuel elements	1000
Moderator	Light water
Number of process channels in the core	100
Number of absorber rods in the core	8
Maximum achievable breeding factor	0.80

* *With natural concentration of isotopes*

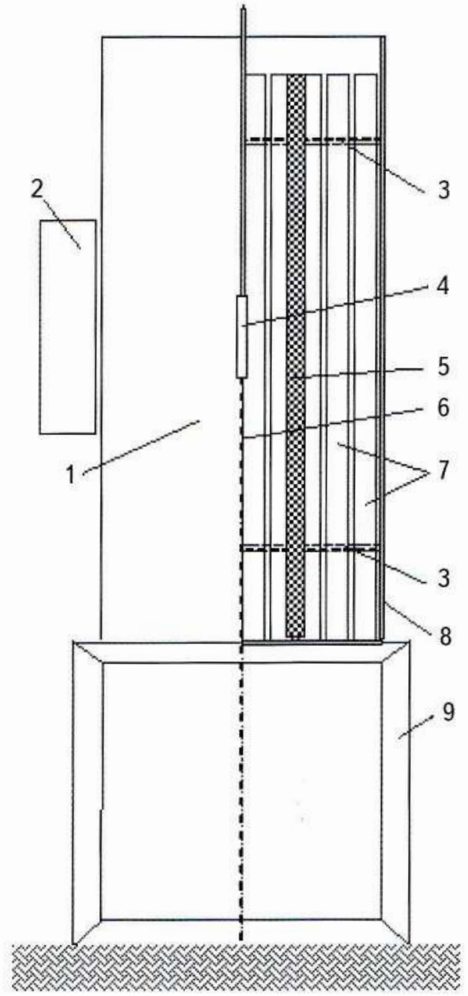

Overall view of the UV-1 SCF

UV-2 URANIUM-WATER SUBCRITICAL FACILITY

The UV-2 SCF is based in the training laboratory's physical hall at MEPhI's Department of Theoretical and Experimental Physics of Nuclear Reactors. The UV-2 facility achieved its first criticality on 04.11.1972.

Main performance of the UV-2 facility

Fuel	Uranium-metal*
Number of fuel elements	1000
Moderator	Light water
Number of process tubes in the core	100
Number of absorber rods in the core	8
Maximum achievable breeding factor	0.81

* *With natural concentration of isotopes*

The UV-2 SCF comprises (see the figure):

- a uranium-water subcritical assembly (*2*) with the maximum effective breeding factor in the assembly equaling $K_{\text{eff.max}}=0.81$;
- a graphite thermalyzer pedestal (*9*);
- a radioisotope source of neutrons (*1*);
- eight absorber rods (*5*). The absorber rods can be inserted into the subcritical assembly between the process channels of rows 2 and 3 (see the fueling map);
- SCF neutron fields instrumentation.

The UV-2 subcritical assembly is a rectangular aluminum-alloy welded tank (*8*) of the depth 1250 mm and the cross section 550×550 mm. It has 100 process channels (*7*) with fuel elements, retained with the aid of spacer grids (*3*). Each channel lattice is square-shaped and has the spacing of 55 mm. The volume between the channels is filled with water to the level, to which the process channels are filled with fuel elements. There is an SNM-14 neutron counter (*4*) placed in the water between the process channels along

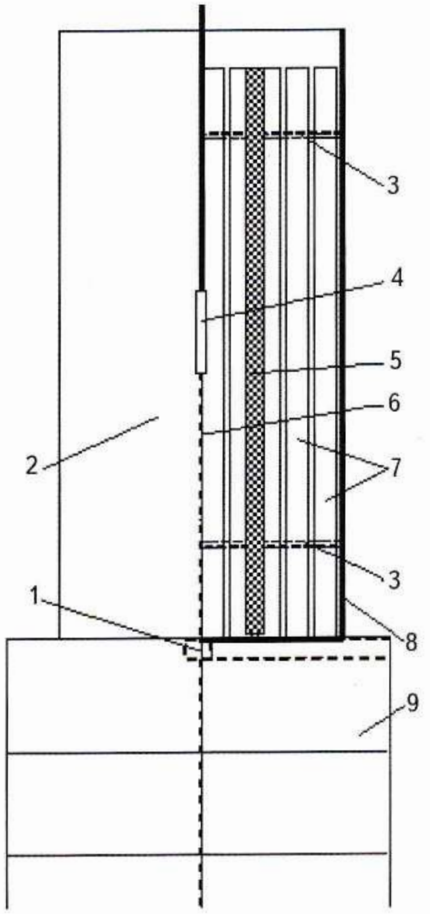

Overall view of the UV-2 SCF

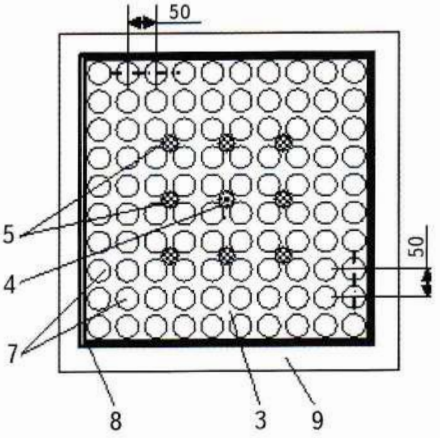

UV-2 SCF core map

the assembly centerline to measure the neutron flux distribution along the assembly.

The basis of each process channel is its body. This is an aluminum-alloy tube plugged at one end. Each tube has the outer diameter of 42 mm, the length of 1250 mm and the thickness of 1 mm. There are grooves made along the tubes for fuel slugs (fuel elements) of the outer diameter 37 mm to be placed coaxially therein such that there is an air gap of 1.5 mm. There are 10 fuel elements in each channel.

The fuel elements contain uranium-metal fuel with natural concentration of isotopes. Each fuel element has the outer diameter of 37 mm and the length of 102 mm. The existing leak-tight aluminum casing has the thickness of 1 mm. There is a 0.4 mm thick cadmium tube inside that bears against the inner walls of the aluminum tubes. All vacant space inside the tubes is filled with boron carbide.

Main areas of studies

The UV-2 SCF is designed for:

- simulation and experimental study of neutronic processes in uranium-water lattices;
- for laboratory training research (as part of practical courses in physics of reactors) to experi-mentally determine variations of K_{eff} due to the absorber rod insertion into the subcritical as-sembly.

UVPSh URANIUM-WATER SUBCRITICAL FACILITY WITH VARIABLE LATTICE SPACING

The UVPSh SCF is based in the training laboratory's physical hall at MEPhI's Department of Theoretical and Experimental Physics of Nuclear Reactors. The facility achieved its first criticality on 18.03.1964.

The UVPSh SCF comprises:

- a subcritical assembly of $K_{eff.max}$=0.83;
- a pedestal composed of graphite blocks and intended to thermalize the radioisotope source neutrons;
- a radioisotope neutron sources accommodated in the graphite pedestal;
- a fabricated welded structure of the working area with a device (a beam shield) installed thereon to secure and position the process channels with fuel elements;
- UVPSh neutron field instrumentation.

Overall view of the UVPSh SCF

The UVPSh SCF subcritical assembly is an aluminum-alloy welded tank of the height 1250 mm and the inner diameter 1190 mm. Submerged in the tank there are 162 process channels hung from the beam shield. The channel lattice is hexagonal-shaped. The design of the beam shield enables the lattice spacing to be adjusted and fixed at 45 mm, 50 mm, 55 mm and 60 mm. The space between the tubes is filled with water to the level, to which the process channels are filled with fuel elements. The central channel (No. 163) does not have fuel elements and is used to accommodate an

Main performance of the UVPSh facility

Fuel	Uranium-metal*
Number of fuel elements	1600
Moderator	Water
Side reflector	Water, thickness > 80 mm
Lower end reflector	Graphite, 600 mm
Number of process channels in the core	162
Number of instrumentation channels in the core	1
Maximum achievable breeding factor	0,83

** With natural concentration of isotopes*

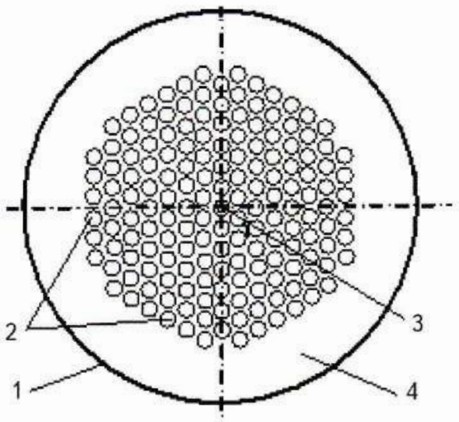

UVPSh SCF core map:
1 – tank; 2 – process channels; 3 – channel with a neutron counter; 4 – side reflector

SNM-14 neutron counter to measure the axial distribution of the neutron flux in the assembly.

The basis of the each process channel is its body designed as an aluminum-alloy shell plugged at one end. The shell has the inner diameter of 42 mm, the length of 1250 mm and the thickness of 1 mm. There are grooves made along the shell for fuel slugs (fuel elements) of the outer diameter 37 mm to be placed coaxially therein such that there is an air gap of 1.5 mm. The process channels are hung from the beam shield using a system comprising a tube lock, a steel rope and a hook with a cone to retain the tube in the beam shield. There are 10 fuel elements in each channel.

The fuel elements contain uranium-metal fuel with natural concentration of isotopes. They have the outer diameter of 37 mm and the length of 102 mm, and have a 1 mm thick leak-tight aluminum casing.

Main areas of studies

The UVPSh SCF is designed for:

– simulation and experimental study of neutronic processes in uranium-water lattices;

– laboratory training research (as part of practical courses in physics of reactors) to experimentally determine the dependence of the material parameter on the uranium-graphite lattice spacing.

UG URANIUM-GRAPHITE SUBCRITICAL FACILITY

The UG SCF is based at the training laboratory's physical hall at MEPhI's Department of Theoretical and Experimental Physics of Nuclear Reactors. The facility achieved its first criticality on 20.04.1955 and was retrofitted in 1973.

The UG SCF comprises:

– a uranium-graphite subcritical assembly designed as a rectangular prism of the height 3500 mm and the print-out dimensions 1800×1800 mm. The prism is formed by 16 layers of graphite blocks (200×200 mm) that have holes, into which fuel is placed, and the lower reflector of the thickness 300 mm. The maximum effective breeding factor is $K_{\text{eff.max}}=0.81$;

– a radioisotope source of neutrons accommodated in the lower layer's central tube;

– a thermalyzer of the radioisotope neutron source formed by two lower layers of the assembly and the reflector;

– SCF neutron field instrumentation.

The uranium-graphite subcritical assembly is composed of graphite blocks of the length

600 mm with axial holes of the diameter 40 mm. The graphite blocks are laid in 16 layers of 27 blocks (9 channels) each. The layers form the tube lattice with the spacing of 200 mm. There are 17 fuel elements in each tube (except the channel that accommodates the neutron source). The prism basis (the thermalyzer pedestal) is composed of solid graphite blocks.

The prism sides, where the channel holes open, are covered with shields, including a 10 mm thick dural rear shield and 10 mm thick acryl front shield. The graphite stack is retained in a fabricated welded structure made of rolled steel sections and rods.

The fuel elements contain uranium-metal fuel with natural concentration of isotopes, have the outer diameter of 37 mm and the length of 102 mm, and feature a 1 mm thick leak-tight aluminum casing.

Main areas of studies

The UG SCF is designed for:

- simulation and experimental study of neutronic processes in uranium-graphite lattices;
- for laboratory training research (as part of practical courses in physics of reactors) to experimentally determine the spatial distribution of neutrons in the uranium-graphite assembly with further determination of the medium's material parameter and the potential critical state parameters: critical volume and critical mass of nuclear fuel.

Overall view of the UG SCF

Main performance of the UG facility

Fuel	Uranium-metal*
Moderator	Graphite
Lower end reflector	Graphite, 300 mm
Number of fuel channels in the core	143
Number of neutron flux measurement channels in the core	12
Number of neutron source channels in the core	1
Neutron source power	$5 \cdot 10^6$ s^{-1}
Maximum achievable breeding factor	0.81

** With natural isotope concentration*

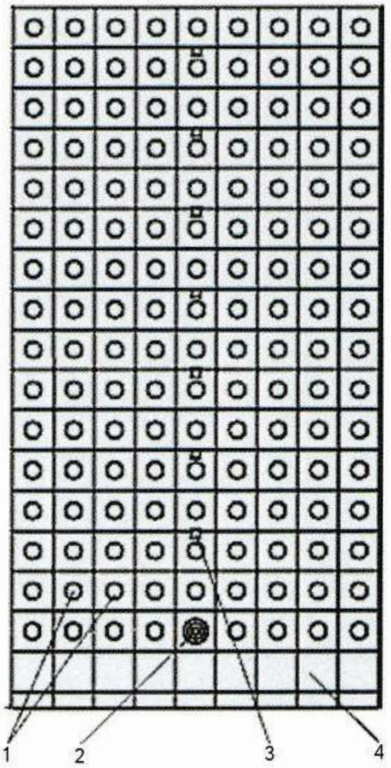

UG core map:
1 – fuel channels; 2 – neutron source channel; 3 – neutron counter channel; 4 – lower end reflector blocks

Contact person

EDUARD KRYUCHKOV
Pro-Rector of MEPhI NRNU
Tel. (495) 323-92-42
Fax (495)324-70-26
EFKrychkov @mephi.ru